Canyon Semiconductor Inc. *Preliminary* **CY2311-16L/20L**

For the latest data sheet, please visit www.sunnywale.com V 0.8

USB Type-C PD3.0 + QC4.0 Controller with Legacy Capability

FEATURES

- USB Type-C 1.2 compatible
- Compliant with USB PD 3.0 v1.1
- Support Programmable Power Supply (PPS)
- Support Vout 20mV/step from 3 to 20V
- Support Current limit 50mA/step up tp 6A
- USB PD transceiver with high noise immunity
- Built-in CC/CV controller
- Support e-Marker cable detection
- Built-in Vconn switch with OCP protection
- Cable compensation for different load condition
- Programmable for configuration and ID
- Support OCP/SCP/OTP/UVP with auto-restart
- Built-in 5V/1.8V LDO
- Low standby current below 500uA
- Support Synchronous Rectifier(CY2311-20L)
- Maximum 32V input voltage rating
- Support non-USB PD and auto detection with:
  - Qualcomm QC 3.0/4.0 built-in
  - Apple Legacy built-in
  - BC 1.2 Legacy built-in
  - FCP
- Package: TSSOP-16L / TSSOP-20L

APPLICATIONS

- AC adapters
- Car chargers
- Power banks
- Power hubs
- USB PD converter

CY2311
19370E
GAUK92

GENERAL DESCRIPTION

CY2311 is an USB Type-C Power Delivery Controller dedicated to power source application with legacy capability. It is compatible with USB Type-C specification rev 1.2 and USB Power Delivery specification rev 3.0 v1.1. CY2311 can support PPS APDO with 20mV/step resolution and 50mA/step current resolution for power management. There are rich power functions embedded on the chip so as to reduce total BOM cost. It also supports SOP' command for e-Marker detection, and can be programmed through CC channel. In addition, it support QC 4.0, BC 1.2, and Apple legacy with auto detection.
Figure 1 shows a low BOM-cost USB PD solution based on CY2311.

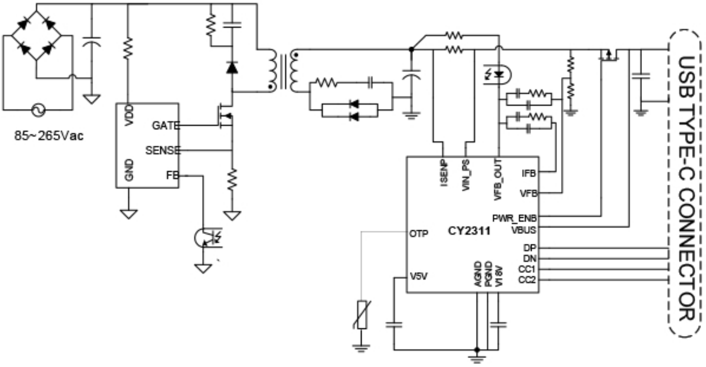
85~265Vac
VDD
GATE
SENSE
GND
FB
ISENP
VIN_PS
VFB_OUT
IFB
VFB
PWR_ENB
VBUS
OTP
CY2311
DP
DN
CC1
CC2
V5V
AGND
PGND
V18V
USB TYPE-C CONNECTOR

Figure 1. A low BOM-cost USB PD Solution Based on CY2311

ABSOLUTE MAXIMUM RATINGS

Parameter	VALUE	UNIT
VIN_PS, ISENN, VBUS, ISENP, PWR_ENB, VFB_OUT, V9, TS	-0.3 to 32	V
GATE	10	V
V5V, IFB, VFB, DP, DN, CC1, CC2, VCP, SDA, SCL, GPIO3, SYNC, ADET	-0.3 to 7	V
V18V	-0.3 to 3.6	V
ESD Susceptibility @HBM	>4	KV
Operating Junction Temperature Range	-40 to 150	°C
Storage Temperature Range	-40 to 150	°C

Absolute maximum ratings are stress limits beyond which damage to the device may happen.

RECOMMENDED OPERATING CONDITIONS

Parameter	MIN	TYP	MAX	UNIT
VIN_PS, ISENN, VBUS, ISENP, PWR_ENB, VFB_OUT, V9, TS	0		25	V
GATE	0		9	V
V5V, IFB, VFB, DP, DN, CC1, CC2, VCP, SDA, SCL, GPIO3, SYNC, ADET	0		5	V
V18V	0		2	V
Operating Junction Temperature Range	-40		125	°C

PACKAGE THERMAL DATA*

Symbol	Parameter	Value	Unit
θ_{JA}	Max Junction-to-Ambient Thermal Resistance	113	°C/W
θ_{JC}	Max Junction-to-Case Thermal Resistance	34	°C/W

[redacted]
pad copper area connected to an inner power plane, and 25 ℃ambient temperature and 0 m/s air flow.

* For TSSOP-16L only.

ELECTRICAL CHARACTERISTICS

(TA = 25℃, unless otherwise specified)

Parameter	Test Conditions	MIN	TYP	MAX	UNIT
UVLO	VIN_PS rising		2.8		V
UVLO Hys.	VIN_PS falling		2.7		V
V5V	VIN_PS = 6V		5		V
V5V Output Current Limit			70		mA
V18V			1.8		V
VIN_PS Current in Sleep Mode	CC1/2 detach after 3 seconds		550		uA
VIN_PS Current in Normal Mode	VIN_PS = 5V		4.5		mA
Internal CLK in Normal Mode			12		MHz
VIN_PS_{OVP}		110	120	130	%VIN_PS
VIN_PS_{UVP}			75		%VIN_PS
I_{OCP}	I_{MAX} = Setting Maximum Current	100	110	120	%I_{MAX}
OCP Deglitch Time		90		110	ms
Internal OTP			140		℃
External OTP current			100		uA

Confidential

BLOCK DIAGRAM

CY2311 includes an USB Type-C power delivery controller which meets USB Power Delivery specification rev 3.0 v1.1. Because of its high voltage process, CY2311 provides cost effective solution without the need of external discrete high voltage components, such as LDO, TL431, CC/CV, pre-driver for external PMOS power switch, buck or boost converter, etc. Meanwhile, it can provide robust protection scheme with built-in OVP/OCP/SCP/OTP features. Also, on-chip Multi-Time-Programming (MTP) is supported for maximum 4 times during the configuration and ID data programming.

[redacted]

QC3.0/2.0, Apple legacy mode and BC 1.2. All of these protocols could be turn on or off, and identified automatically. It could be configured according to user applications.

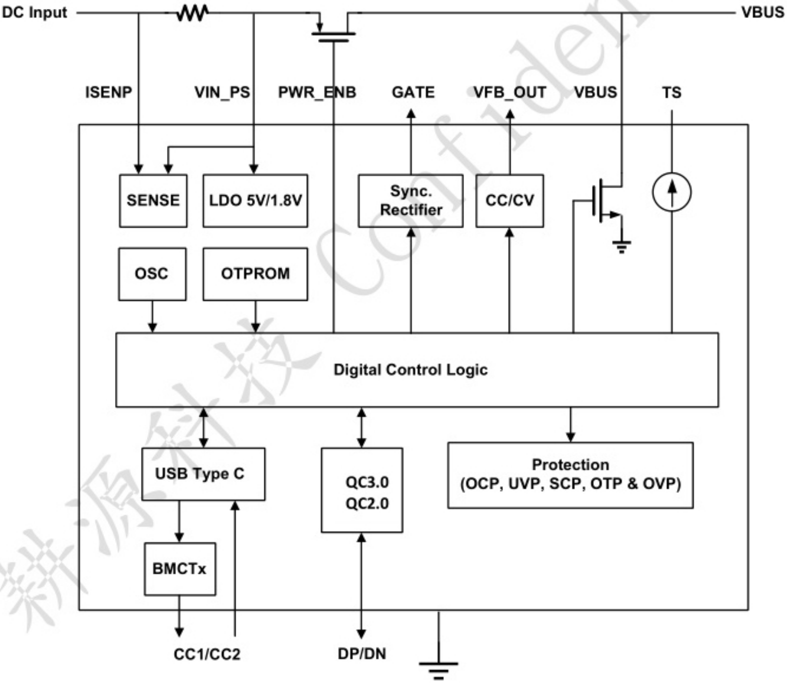
DC Input
VBUS
ISENP
VIN_PS
PWR_ENB
GATE
VFB_OUT
VBUS
TS
SENSE
LDO 5V/1.8V
Sync. Rectifier
CC/CV
OSC
OTPROM
Digital Control Logic
USB Type C
QC3.0
QC2.0
Protection (OCP, UVP, SCP, OTP & OVP)
BMCTx
CC1/CC2
DP/DN

Confidential

PIN DESCRIPTION

TSSOP-16L	TSSOP-20L	TQFN-24L	Pin Name	Type	Description
1	2	23	V5V	P	LDO5V output, 10uF to GND.
2	4	24	IFB	AIO	CC input . Negative Node of CC OPAM for photo-coupler
3	5	1	VFB	AIO	CV input . Negative Node of CV OPAM for photo-coupler
4	6	2	AGND	G	Ground
5	7	3	DP	AI	USB D+ input
6	8	4	DN	AI	USB D- input
7	9	5	CC1	AIO	Type-C CC1
8	10	6	CC2	AIO	Type-C CC2
9	11	10	V18V	P	LDO1.8V output, 0.1uF to GND
10	12	12	PGND	G	Ground
11	13	13	VBUS	AI	VBUS terminal for discharge path
12	14	14	PWR_ENB	AO	External PMOS gate driver. To control External MOS switch 0: To enable VBUS voltage 1: Disconnect VBUS
13	15	15	VIN_PS	P	High Voltage Power Input (Vmax = 32 V) .
-	-	16	ISENN	AI	Input current sense negative node.
14	16	17	ISENP	AI	Input current sense positive node.
15	20	21	TS	AO	Source current (100uA) to external NTC sensor for external OTP protection.
16	1	22	VFB_OUT	AO	CC / CV output. Open drain output for photo-coupler (TL431 like)
-	3	-	SYNC	AI	Synchronization input signal
-	17	18	GATE	AO	Gate driver of synchronization NMOSFET
-	18	19	V9	AO	Voltage source
-	19	20	VCP	AO	Charge pumping signal
-	-	9	SDA	D	I2C/GPIO
-	-	8	SCL	D	I2C/GPIO
-	-	11	GPIO3	D	GPIO3
		7	ADET	AI	Type-A plug in detection

Type:
P - Power ; G – Ground
AI – Analog Input pin ; AO - Analog Output pin ; AIO - Analog Input/Output pin ; D - Digital pin

Confidential

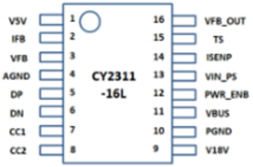
V5V
IFB
VFB
AGND
DP
DN
CC1
CC2
1
2
3
4
5
6
7
8
16
15
14
13
12
11
10
9
CY2311
-16L
VFB_OUT
TS
ISENP
VIN_PS
PWR_ENB
VBUS
PGND
V18V

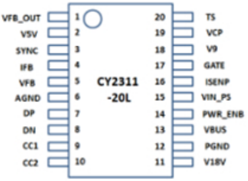
VFB_OUT
V5V
SYNC
IFB
VFB
AGND
DP
DN
CC1
CC2
1
2
3
4
5
6
7
8
9
10
20
19
18
17
16
15
14
13
12
11
CY2311
-20L
TS
VCP
V9
GATE
ISENP
VIN_PS
PWR_ENB
VBUS
PGND
V18V

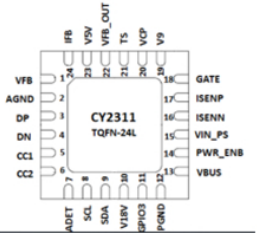
IFB
V5V
VFB_OUT
TS
VCP
V9
24
23
22
21
20
19
VFB
AGND
DP
DN
CC1
CC2
1
2
3
4
5
6
CY2311
TQFN-24L
18
17
16
15
14
13
GATE
ISENP
ISENN
VIN_PS
PWR_ENB
VBUS
7
8
9
10
11
12
ADET
SCL
SDA
V18V
GPIO3
PGND

FUNCTIONAL DESCRIPTION

1. System Power On Sequence:

When the external power source is provided, CY2311 will be wake up after Power On Reset (V_RST ~ 2.8V), then the internal 5V_LDO and 1.8V_LDO will be settled, USB PD controller and MCU be initialized. All analog control block will be ready and waiting for PD negotiation process. Meanwhile, CY2311 will monitor the voltage and current condition to avoid abnormal condition happens. Once any unacceptable condition happens, CY2311 will go into protection procedure according to what kind of abnormal condition happens.

2. Voltage Transition:

According to USB PD's protocol, PD device request different power profile and CY2311's power control block will start to change voltage and current value, CY2311 will provide corresponding Over Voltage Protection (OVP), Over Current Protection (OCP) scheme, and control the feedback system stability to guarantee monotonic voltage transition and avoid violate USB PD electrical specification.

CY2311 provides zero-mismatch voltage methodology that is more flexible for customer system design requirement. When UFP/DFP make an acceptable power request deal, CY2311 will change VFB voltage according to the USB PD command that is around 1/10 of expected voltage. The voltage regulator control loop (AC/DC or DC/DC) will regulate the needed V_{BUS} voltage according to VFB. In addition, the shunt regulator is built in to minimize the total external components and cost.

Confidential

3. Protection:

CY2311 provides OVP/UVP/OCP/SCP/OTP functions and also support Constant Current (CC) function. All of the protection thresholds will depend on the requested power profile and provide the most reliable protection scheme.

CY2311 provides OVP feature by turning off the power switch when VBUS is 20% higher than target voltage and enable internal discharge path to reduce the over-voltage duration, and terminates discharge current as soon as VBUS has reached the target voltage. To avoid VBUS working abnormally, CY2311 provides UVP function whenever VBUS below 75% of target voltage.

To ensure USB PD could operate safely, CY2311 provides programmable OCP function to make sure output current will not be higher than the allowed maximum current. Once conditions happen, CY2311 will shut down the USB PD system and sends "Hard Reset" to the UFP device.

4. Synchronization Rectifier

In order to provide higher efficiency in wall adaptor system, CY2311 built-in S.R. circuit which is to replace the schottky diode of the secondary side with low Rds(on) MOSFET. It is suitable for low side rectifying application system. CY2311 adopts proprietary S.R. control methodology that can work very well no matter DCM or CCM mode. The SR controller can support switching frequency up to 350 KHz.

The SR controller has a 300mA driving capability. The driver output voltage is clamped at 9V to drive N-channel MOSFET in lower Rds(on) operation. To minimize the power consumption at light-load condition, CY2311 disables the SR driver and enter burst mode. The controller monitors the switching frequency of

PWM signal and exit the burst mode.

Figure 3 shows a USB PD Solution with Synchronization Rectifier based on CY2311-20L.

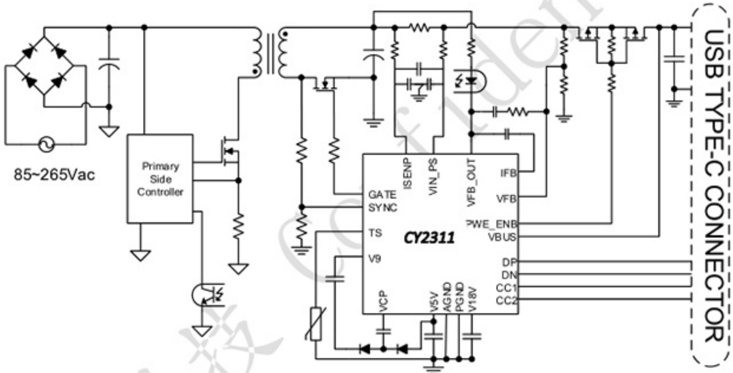
85~265Vac
Primary Side Controller
GATE
SYNC
TS
V9
VCP
ISENP
VIN_PS
VFB_OUT
V5V
AGND
PGND
V18V
IFB
VFB
PWE_ENB
VBUS
DP
DN
CC1
CC2
CY2311
USB TYPE-C CONNECTOR

Figure 3. A CY2311-based USB PD Solution with Synchronization Rectifier

5. CV/CC

The CY2311 supports constant voltage (CV) and constant current (CC) functions to control the output voltage and the output current by the control pin VFBO through feedback pins VFB and IFB. During the CV mode, CY2311 operates in Fixed PDO, and the output voltage will be regulated to the request voltage if the output current is below the allowed maximum current. Once sink device draws more than I_{OCP}, over current protection will occurred. When the CC mode function is enabled, the output voltage will drop and the source current is limited within 150mA of the requested current whenever output current exceeds the allowed maximum current. When the output voltage drops below UVP, constant current limit will turn-off V_{BUS} and is going to error recovery procedure. The CY2311 will reset if the voltage continues dropping to power-on-reset(POR) threshold.

Figure 4 and 5 shows V/I profile of this CC/CV functions.

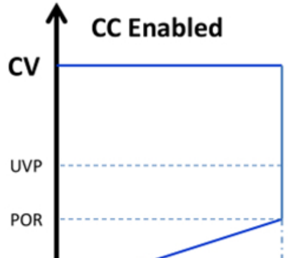

Confidential

Figure 4. CY2311 V/I Profile when CC enabled

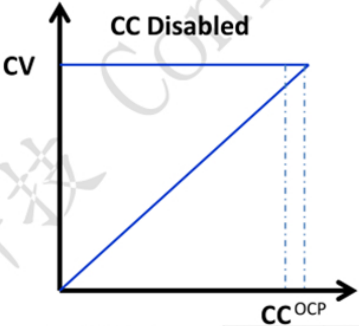

SECTION A–A

N	MIN.	NOM	MAX.	
16	4.[illegible]	[illegible]	[illegible]	[illegible]

APPLICATION CIRCUITS

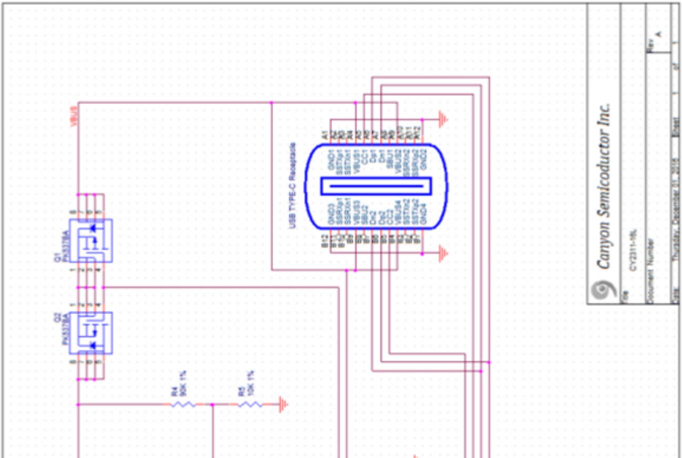
VBUS
Q1
PK537BA
Q2
PK537BA
R4
90K 1%
R5
10K 1%
USB TYPE-C Receptacle
A1 A2 A3 A4 A5 A6 A7 A8 A9 A10 A11 A12
GND1 SSTXp1 SSTXn1 VBUS1 CC1 Dp1 Dn1 SBU1 VBUS2 SSRXn2 SSRXp2 GND2
GND3 SSRXp1 SSRXn1 VBUS3 SBU2 Dn2 Dp2 CC2 VBUS4 SSTXn2 SSTXp2 GND4
B12 B11 B10 B9 B8 B7 B6 B5 B4 B3 B2 B1
Canyon Semicoductor Inc.
Title
CY2311-16L
Document Number
Rev
A
Date
Thursday, December 01, 2016
Sheet
1
of
1

APPLICATION CIRCUITS

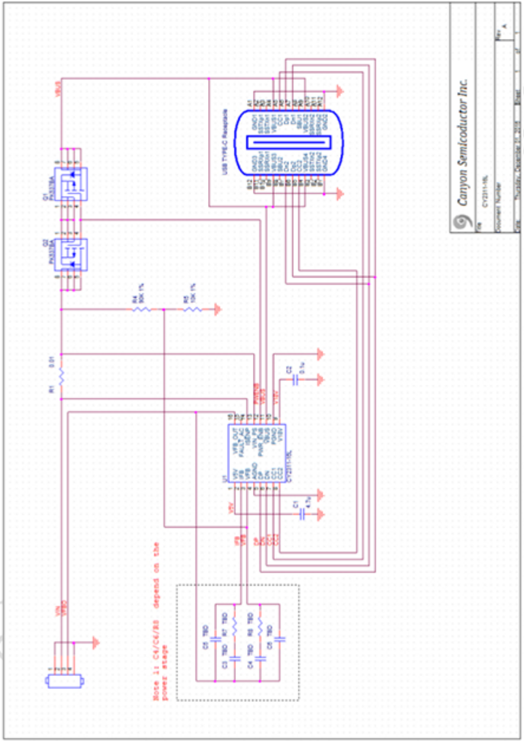
VIN
VFBO
R1 0.01
Q2 PK537BA
Q1 PK537BA
VBUS
R4 90K 1%
R5 10K 1%
USB TYPE-C Receptacle
Note 1: C4/C6/R8 depend on the power stage
C5 TBD
C3 TBD
R7 TBD
C4 TBD
R8 TBD
C6 TBD
IFB
VFB
V5V
DP
DN
CC1
CC2
U1
CY2311-16L
V5V
IFB
VFB
AGND
DP
DN
CC1
CC2
VFB_OUT
FAULT_AC
ISENP
VIN_PS
PWR_ENB
VBUS
PGND
V18V
PWENB
VBUS
V18V
C1 4.7u
C2 0.1u
GND1
SSTXp1
SSTXn1
VBUS1
CC1
Dp1
Dn1
SBU1
VBUS2
SSRXn2
SSRXp2
GND2
GND3
SSRXp1
SSRXn1
VBUS3
SBU2
Dn2
Dp2
CC2
VBUS4
SSTXn2
SSTXp2
GND4
Canyon Semicoductor Inc.
Title
CY2311-16L
Document Number
Rev
A
Date: Thursday, December 31, 2015
Sheet 1 of 1

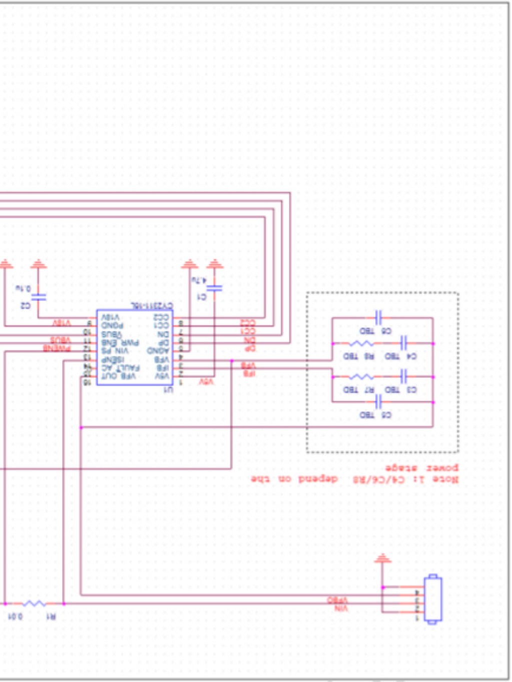
R1 0.01
VIN
VFBO
Note 1: C4/C6/R8 depend on the power stage
C5 TBD
C3 TBD
R7 TBD
C4 TBD
R8 TBD
C6 TBD
IFB
VFB
V5V
DP
DN
CC1
CC2
U1
CY2311-16L
PWENB
VBUS
V18V
C1 4.7u
C2 0.1u

AC/DC CONNECTION

Label	Description
VIN	Connected to AC/DC module positive output, max < 32V.
VFBO	Feedback pin connected to photo-coupler of AC/DC
GND	Connected to AC/DC module negative output.

Table 1. Interface Definition between AC/DC adapter and USB PD module

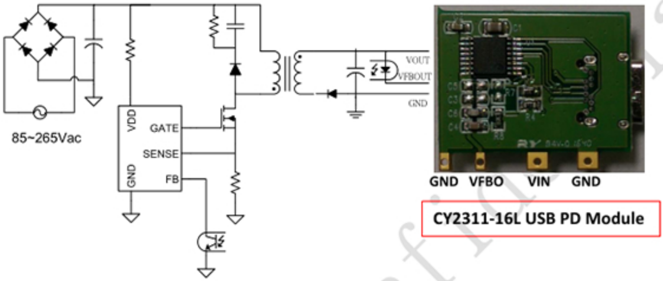
85~265Vac
VDD
GATE
SENSE
GND
FB
VOUT
VFBOUT
GND
GND
VFBO
VIN
GND
CY2311-16L USB PD Module

Figure 6. Connection of AC/DC adapter and CY2311-16L module

AC/DC Adapter Design Notes

1. Make sure AC/DC Vout could sustain from 3.3V to 20V during the AC/DC power source variation from 85 to 264VAC。
2. There are about 7 times of voltage variation in Vcc of AC/DC PWM controller if a Flyback power architecture is used for full AC power input range and full USB PD output voltage range 3-20V under light and full load。
3. In case Vcc of AC/DC PWM module needs some voltage regulation to avoid triggering its own OVP, CY2311's OVP function could be used to create the OVP capability of this USB PD adapter

Confidential

PROGRAMMABLE DATA

CY2311 provides 3 kinds of user-programmable tables for users' specific applications: PDO Tables, Parameter Tables, and ID Tables.

PDO Tables

CY2311 supports up to 7 PDOs.

[redacted]

Parameter Tables

CY2311 supports cable programmable compensation. Cable compensation is used to make up the voltage drop which caused by resistance of current sense resistor, MOSFET and path loss between VIN and USB Type-C Connector.

Setting	Description
Level 7	0.21 Ω
Level 6	0.18 Ω
Level 5	0.15 Ω
Level 4	0.12 Ω
Level 3	0.09 Ω
Level 2	0.06 Ω
Level 1	0.03 Ω
Level 0	0 Ω

ID Tables

CY2311 returns data of these tables when it receives Discover ID of VDM.

ID Header VDO

Bit(s)	Description
B31	USB communications capable as a USB host
B30	USB communications capable as a USB device
B29..27	Product type
B26	Modal operation supported
B25..16	Reserved. Shall be set to zero
B15..0	16-bit unsigned integer. USB Vendor ID

Cert Stat VDO

Bit(s)	Description
B31..0	32-bit unsigned integer. XID

Product VDO

Bit(s)	Description
B31..16	16-bit unsigned integer. USB product ID
B15..0	16-bit unsigned integer. bcdDevice

Confident

ORDERING INFORMATION

Ordering Number	Product Features	Part Number	Package Type	Package Outline	Shipping Support
CY2311-16L	PD3+QC3	CY2311	TSSOP-16L	173 mil	Tube/Tape
CY2311-20L	PD3+QC3+SR	CY2311	TSSOP-20L	173 mil	Tube/Tape
CY2311-24Q	PD3+QC3+I2C	CY2311	TQFN-24L	4mm*4mm	Tray/Tape

PACKAGE INFORMATION - TSSOP-16L/20L

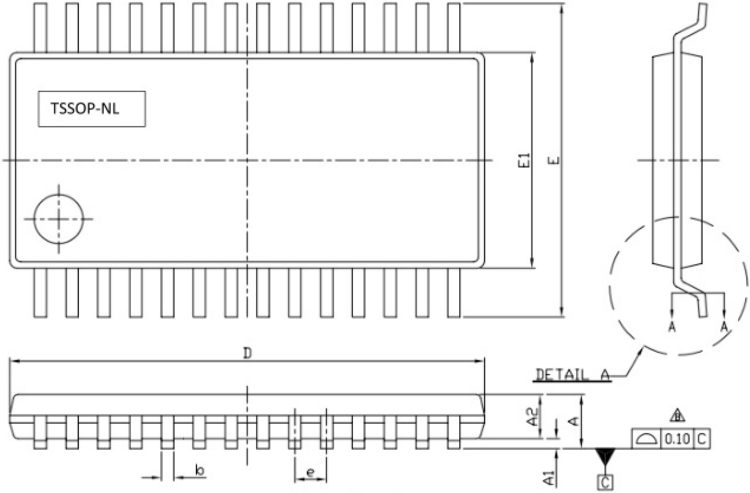
TSSOP-NL
E1
E
D
DETAIL A
A2
A
A1
b
e
A
A
△B
0.10
C
C

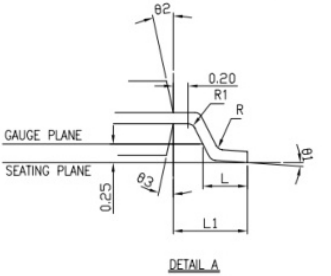
θ2
0.20
R1
R
GAUGE PLANE
SEATING PLANE
θ1
θ3
0.25
L
L1

DETAIL A

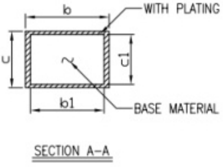
b
WITH PLATING
c
c1
b1
BASE MATERIAL

SECTION A-A

SYMBOL	DIMENSION IN MM			DIMENSION IN INCH		
	MIN.	NOM	MAX.	MIN.	NOM	MAX.
△B A			1.20			0.047
A1	0.05		0.15	0.002		0.006
A2	[redacted]	[redacted]	[redacted]	[redacted]	[redacted]	[redacted]
△B L	[redacted]	[redacted]	[redacted]	[redacted]	[redacted]	[redacted]
E	6.40 BSC.			0.252 BSC.		
E1	[redacted]	[redacted]	[redacted]	[redacted]	[redacted]	[redacted]
R	0.09			0.004		
R1	0.09			0.004		
b	0.19		0.30	0.007		0.012
b1	0.19	[redacted]	[redacted]	[redacted]	[redacted]	[redacted]
c	0.09		0.20	0.004		0.008
c1	0.09		0.16	0.004		0.006
L1	1.0 REF.			0.039 REF.		
e	0.65 BSC.			0.026 BSC.		
θ1	0		8	0		8
θ2	12 REF.			12 REF.		
θ3	12 REF.			12 REF.		

	D (MM)			JEDEC
N	MIN.	NOM	MAX.	
16	[redacted]	[redacted]	[redacted]	[redacted]
20	[redacted]	[redacted]	[redacted]	MO-153 (AC)

PACKAGE INFORMATION - TQFN-24L-1

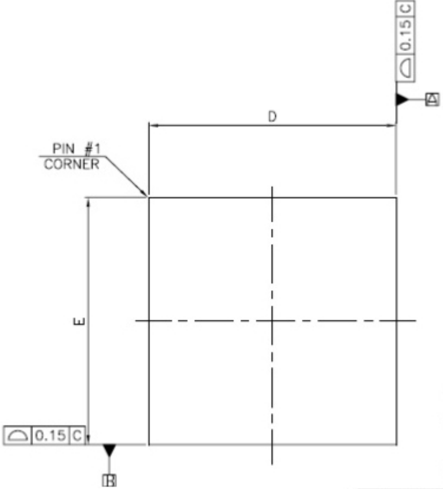
0.15 C
A
D
PIN #1
CORNER
E
0.15 C
B

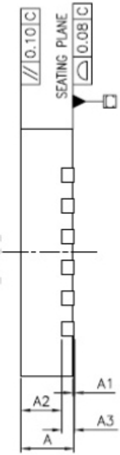
// 0.10 C
SEATING PLANE
0.08 C
C
A1
A2
A3
A

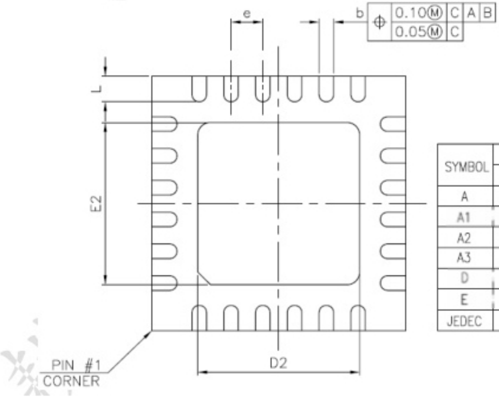
e
b
0.10Ⓜ C A B
0.05Ⓜ C
L
E2
D2
PIN #1
CORNER

SYMBOL	DIMENSION IN MM			DIMENSION IN INCH		
	MIN.	NOM	MAX.	MIN.	NOM	MAX.
A	0.80	[illegible]	[illegible]	[illegible]	[illegible]	0.035
A1	0.00	0.02	0.04	0.000	[illegible]	0.002
A2	0.60	[illegible]	[illegible]	0.024	[illegible]	0.028
A3	0.20 REF.			0.008 REF.		
D	[illegible]	[illegible]	[illegible]	[illegible]	[illegible]	[illegible]
E	[illegible]	[illegible]	[illegible]	[illegible]	[illegible]	[illegible]
JEDEC	MO-220					